CHAPTER 17
Capacitors

Stored Charge Produces an Electric Field

In this chapter you will learn about capacitors. Capacitor sounds a bit like *capacity*. You might want to look up capacity in a dictionary. Capacity is the ability to hold, receive or accommodate. This gives us a good beginning definition for a *capacitor*. Capacitors hold electrical energy. As you learned earlier, *energy* is the ability to do work.

You are familiar with several devices that store energy. Batteries store chemical energy. They produce electricity, or electrical energy, when the chemicals react under the proper conditions. A dam on a river stores water. The energy of that water pressure can run a generator to produce electricity.

You may wonder how capacitors store electrical energy. Figure 1 shows a circuit that stores electricity in a capacitor. Notice the capacitor schematic diagram looks like two parallel conductors with a space between them. This schematic symbol accurately pictures capacitor construction.

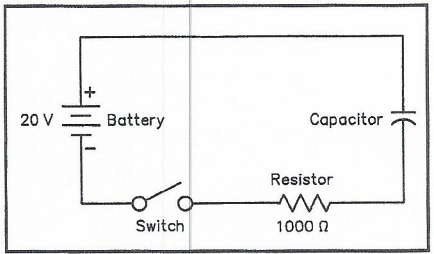

Figure 1—This circuit includes a battery, a switch, a resistor and a capacitor. The text explains how this circuit stores electrical energy in the capacitor.

When you close the switch, electrons leave the negative battery terminal. The positive battery terminal attracts the electrons, and they move through the circuit. Use Ohm's Law to calculate the current when you first close the switch. Do you remember Ohm's Law? That's right, voltage equals current times resistance. Solve this equation for current, then use the voltage and resistance from Figure 1.

$$I = \frac{E}{R} \qquad \text{(Equation 1)}$$

$$I = \frac{20 \text{ volts}}{1000 \text{ ohms}} = 0.02 \text{ amperes} = 20 \text{ mA}$$

This current can't continue for long, however. The electrons reach the capacitor, but they can't get through it because there is an insulating layer between the conductors. Two things happen here. First, electrons move onto the conductor surface. These electrons exert an electric force to repel electrons from the opposite conductor. Second, the positive battery terminal attracts electrons from the second conductor. As electrons move off the second conductor, it has a positive charge.

Figure 2 shows the capacitor conductors, or plates, as the charge begins to accumulate. The negative charge on the first capacitor plate also repels any more electrons that try to reach it. At first there are few electrons and this force is small. The battery pushes with a stronger force, so electrons continue to accumulate. As more electrons pile up, however, the force becomes stronger. Eventually, the repelling force of electrons on the capacitor plate equals the battery force, and no more electrons flow onto the capacitor.

While electrons are piling up on one capacitor plate, the battery is pulling electrons off the other plate. Here, as the battery pulls electrons off that plate it becomes more difficult to pull electrons away. Again, the forces reach a balance, and the battery can't pull any more electrons off the capacitor plate.

Figure 2—One capacitor plate receives a negative charge and the other one receives a positive charge. Eventually no more electrons can flow onto the negative side and no more can leave the positive side.

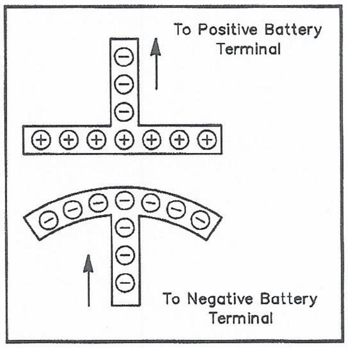

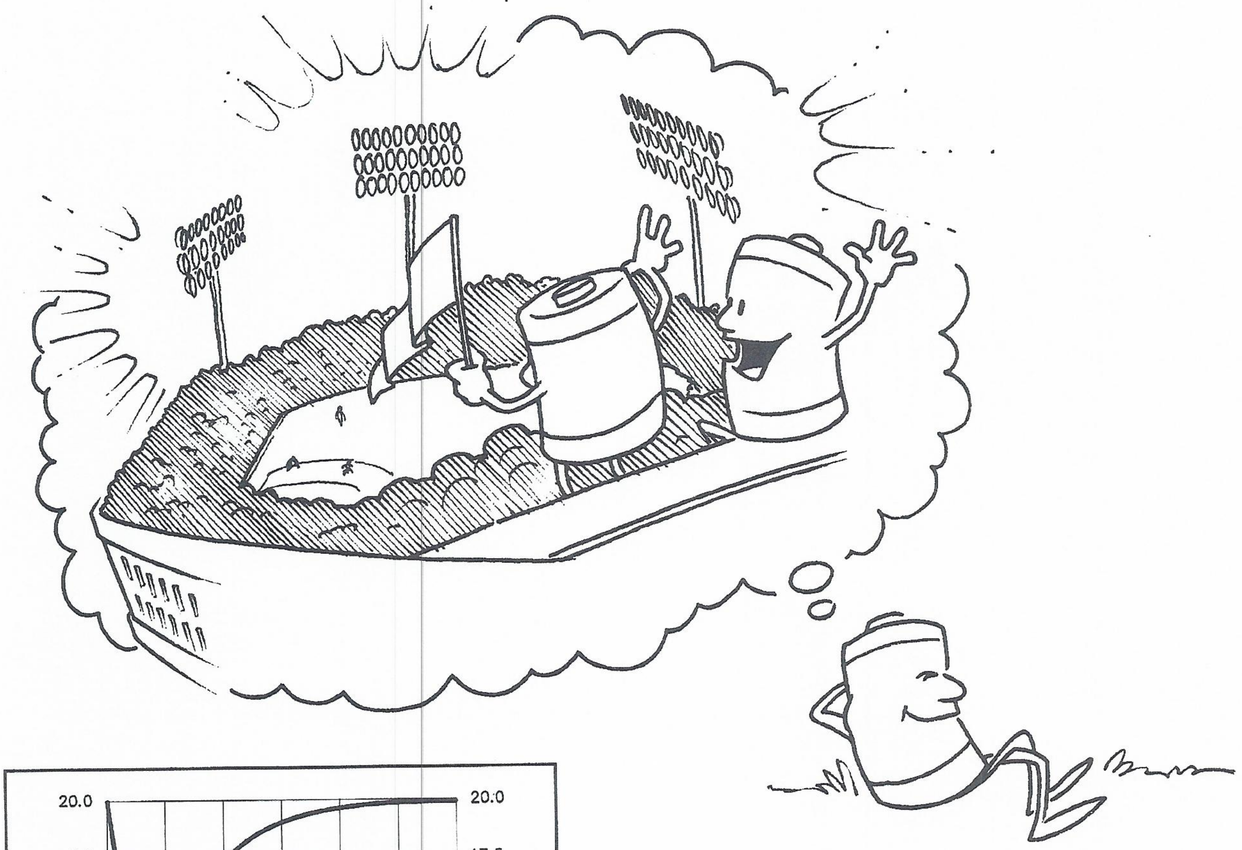

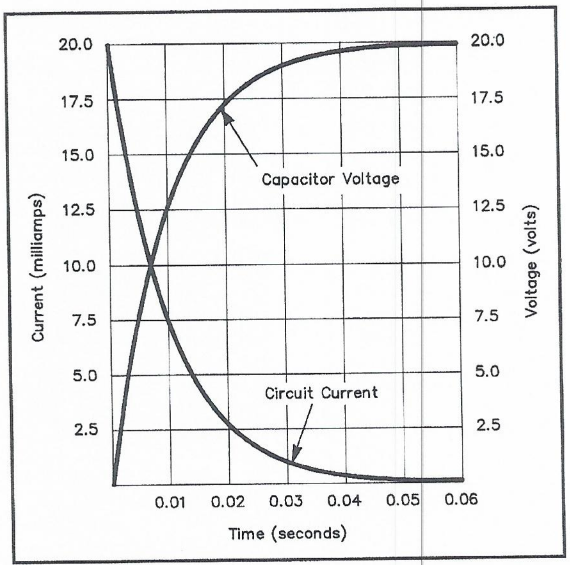

Figure 3—This graph shows the current through the Figure 1 circuit. It also shows the voltage across the capacitor.

Figure 3 shows a graph of the circuit current. When you first close the switch the current is 20 mA. Almost immediately the current decreases, though.

Figure 3 also has a graph of the voltage across the capacitor plates. When you first close the switch there is no voltage on the plates. As the electric charge builds up, there is a voltage across them, however. When that voltage reaches the battery voltage, current no longer flows in the circuit.

The time, current and voltages shown on Figure 3 apply only to this circuit. These numbers depend on the battery voltage, circuit resistance and the capacitor used in the circuit. Other combinations result in different numbers on the graph. The graph *shapes* don't change, however.

Do you remember there is an *electric field* between two electrically charged objects? This is similar to the magnetic field between two magnets. As charge builds up on the capacitor plates, then, there is an electric field between the plates.

This electric field between the capacitor plates represents stored electrical energy. The capacitor will store this energy as long as the charge remains on the capacitor plates.

Suppose we remove the capacitor from the circuit. A perfect capacitor would not lose any charge. Of course no capacitor is perfect, so some of the charge will leak through the insulation between the capacitor plates. The capacitor must have wire leads to attach it to a circuit, so some charge always leaks off the capacitor into the air surrounding the capacitor leads.

You should be careful with capacitors that are in circuits. They can hold a dangerous charge long after you turn off the circuit. If you accidentally contact the leads of such a capacitor, you can receive an electrical shock.

Increasing Plate Surface Area Strengthens the Electric Field

A capacitor has two conducting surfaces separated by an insulator. A battery or other voltage source puts extra electrons on one surface, leaving a negative charge. The voltage source removes electrons from the other surface, leaving a positive charge. The electric charge on these surfaces, or plates, produces an electric field.

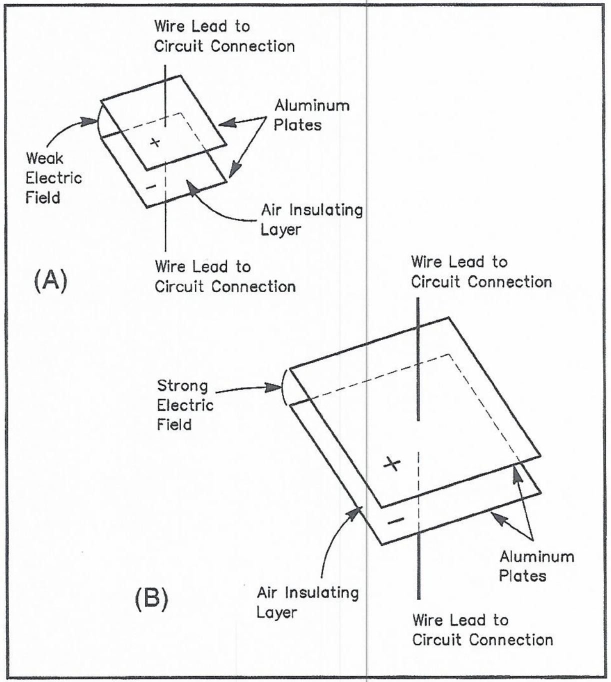

Figure 1—The capacitor shown at A has a small plate surface area. It holds a small electric charge and there is a weak electric field between the capacitor plates. Capacitor B is much larger than capacitor A. When the same voltage connects to each capacitor, capacitor B holds a larger electric charge. The electric field between capacitor B's plates is stronger than the electric field between capacitor A's plates.

Suppose you connect a capacitor to a voltage source. The capacitor charges until the voltage across the plates equals the supply voltage. You can't put any more charge on the capacitor, unless you increase the supply voltage. A larger voltage stores a larger charge, and thus more energy.

Do you keep a bottle of water in your refrigerator? Sometimes nothing quenches thirst better than a glass of ice-cold water. Have you ever reached for the water bottle only to find it nearly empty? That can be frustrating, especially on a hot summer day. Perhaps you need a water bottle that has a larger *capacity*. Instead of a 1 litre bottle you might want a 2 litre bottle or even a 4 litre bottle. Larger bottles hold more water.

Does this give you any ideas about how to store more energy in an electronics *capacitor*? What do you suppose would happen if the capacitor plates were larger? Yes, the negative plate could hold more electrons. The positive plate also would give up more electrons, to have a larger positive charge.

Figure 1 shows two capacitors made from aluminum plates. A layer of air separates the plates, and insulates them so no electrons can flow between them. The capacitor shown at A has small plates, and only stores a small charge. The electric field between the plates of this capacitor is weak. It doesn't store much electrical energy.

Figure 1B shows a capacitor with much larger plates. Let's imagine they are ten times larger than the plates of capacitor A. Capacitor B can hold ten times more charge than capacitor A. Capacitor B's electric field is ten times stronger, too.

Ceramic disk capacitors have two metal plates with a thin ceramic insulating layer between them. Small wire leads attach to each plate, so you can connect the capacitor into a circuit. Figure 2 shows a cut-away view of a ceramic disk capacitor.

The insulating layer material and thickness determine the capacitor's highest safe operating voltage. If you connect a capacitor to a voltage that is too high for the

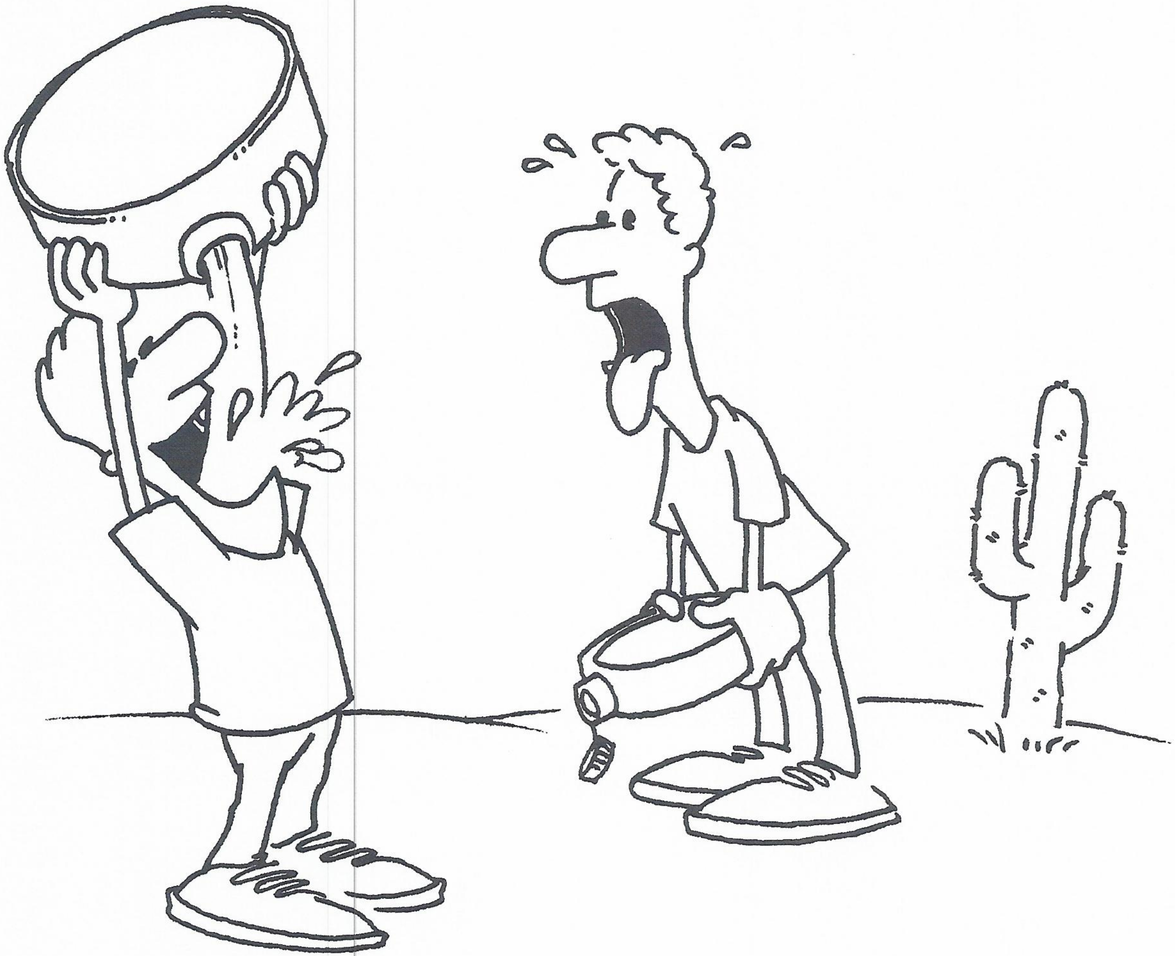

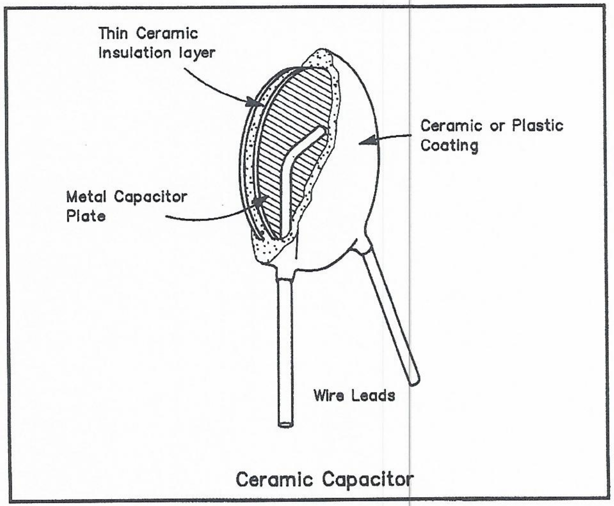

insulating layer, a spark will jump through the insulation. This will destroy the capacitor.

Suppose you find two ceramic disk capacitors with the same voltage rating. One disk has a larger diameter than the other. Which capacitor is likely to have the higher capacitance rating? That's right. The capacitor with the larger diameter probably has a higher capacitance. It will hold a larger electric charge and will store more electrical energy.

Figure 2—This is a cut-away view of a ceramic disk capacitor. The metal plates have a thin ceramic insulating layer between them. A small wire lead attaches to each plate, so you can connect the capacitor to a circuit. This assembly then has a ceramic or plastic coating applied to protect the capacitor from moisture and other harmful effects.

Increasing the Number of Plates Increases Plate Surface Area

Larger capacitor plates hold more electric charge. This produces a stronger electric field and stores more energy. How large can we make the capacitor plates, though? Can you imagine capacitors made with plates 50 centimetres on a side? That sure would limit how small we could make electronics circuits.

We don't want a capacitor that takes up the area of a kitchen table top. How can we make a capacitor with more plate surface area? Suppose we fold the two plates in half. Fit one side of each plate between the two halves of the other plate. Figure 1 shows a capacitor made this way.

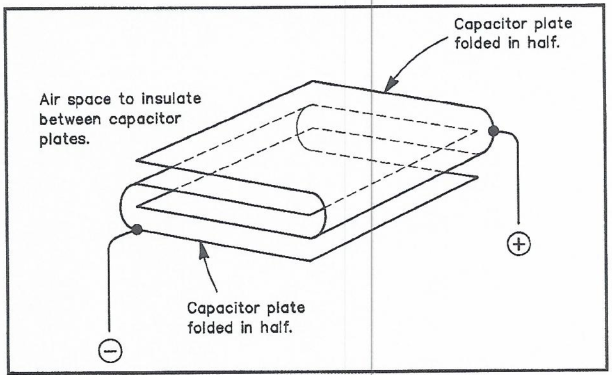

Figure 1—This capacitor has two plates folded in half to save space.

It will be difficult to fold the plates more than once because there is no way to fit them together after you fold them. You can cut the large plates into smaller pieces, though. Then you can connect half the pieces along one edge and half along the other edge. You can put the two stacks together, then, like Figure 2 shows.

This is a much more practical construction method than using two large plates. Many capacitor types use this stacked-plate construction. It is difficult to see the construction when you look at a capacitor, though. Most capacitors have a protective coating, so you can't see inside.

Many electronics circuits require adjustable capacitors. You may change the *capacitance*, or the amount of charge a capacitor can hold when you tune a radio receiver.

One common variable capacitor type uses one set of plates that rotates and another set of fixed plates. The rotating plates change the overlapping area. When the plates completely mesh, the capacitor has its maximum value. When the plates have no overlapping area, the capacitor has its minimum value.

Figure 3 shows such a variable capacitor. A layer of air separates the rows of capacitor plates, preventing electrons from flowing between them.

You can find these "air variable capacitors" in many sizes. Some have a few small plates. Others have larger plates, and usually more of them.

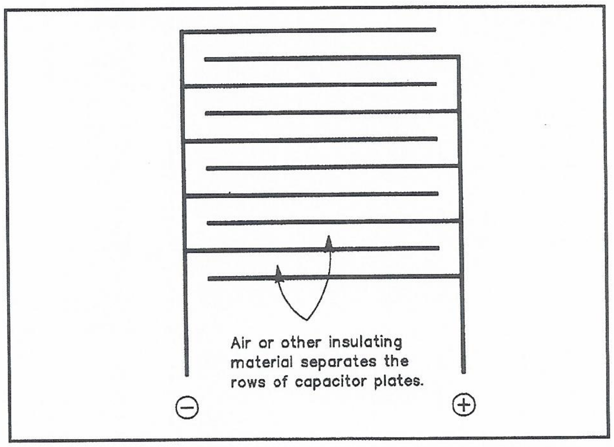

Figure 2—This capacitor consists of two stacks of plates each connected along one edge. Air or another insulating material separates the two sets of plates.

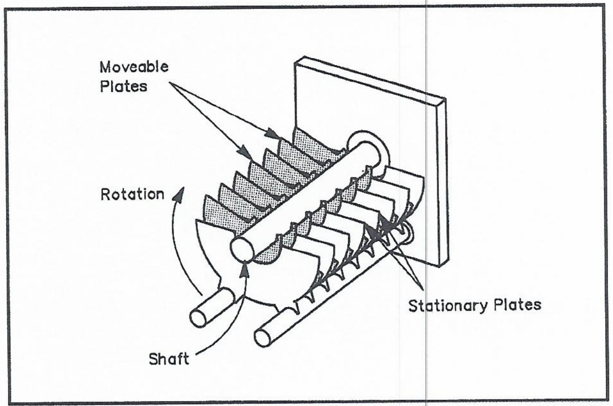

Figure 3—This variable capacitor has two sets of plates. One set can rotate, while the other set cannot move. The rotating plates turn in and out of the fixed plates, changing the overlapping surface area.

There is another way to reduce the capacitor's package size. If you make the plates from a metal foil, you can roll the plates and insulating material into a cylinder. This only works if you use a solid material to insulate between the plates, of course.

You can make a capacitor using this construction technique. You'll need some aluminum foil and waxed paper. The size of the aluminum-foil capacitor plates isn't critical. Tear 4 square pieces of waxed paper. Make their length equal the roll's width. Then tear 4 pieces of aluminum foil. Make the foil about an inch smaller than the waxed paper in both dimensions. Leave a foil tab on each foil piece. These will connect alternate foil layers. When you assemble your capacitor, alternate the direction of the tabs, so the first and third layers connect on one side and the second and fourth layers connect on the other side.

Figure 4 shows a "sandwich" of several aluminum-foil and waxed-paper layers. The odd-numbered foil layers connect to form one side of the capacitor. Even-numbered foil layers connect to form the other side. Waxed-paper layers separate each foil layer. "Alligator clip leads" connect to each side of the capacitor.

Now you can roll your capacitor, starting at the end opposite the clip leads. A few small pieces of tape will hold the capacitor in a cylindrical shape. Figure 4B shows the rolled capacitor.

Now you can perform an experiment with your capacitor. Connect one lead to a 6- or 12-volt battery's negative terminal and the other lead to the positive terminal. Now connect a voltmeter across the capacitor leads. The voltmeter should register the battery voltage.

Disconnect the battery and watch the voltmeter. The reading will gradually decrease. The voltmeter drains off the stored energy because it needs some current to register the voltage.

Charge your capacitor again, but don't connect the voltmeter. Disconnect the battery and wait a minute or two. Then connect the voltmeter. Remember which side went to the positive battery terminal, and connect the voltmeter the same way. Otherwise the meter needle will try to swing the wrong way, and you could damage the meter.

Do not connect your capacitor across the ac mains. This would be extremely dangerous. To be safe, only connect your capacitor to batteries. Don't use an ac-operated power supply.

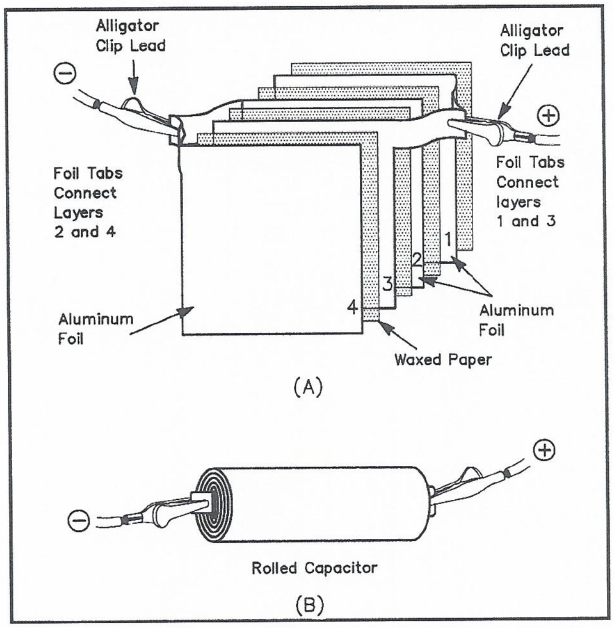

Figure 4—You can make an experimental capacitor. Part A shows a "sandwich" of aluminum-foil layers with waxed paper between them. Part B shows how to roll the capacitor into a cylinder.

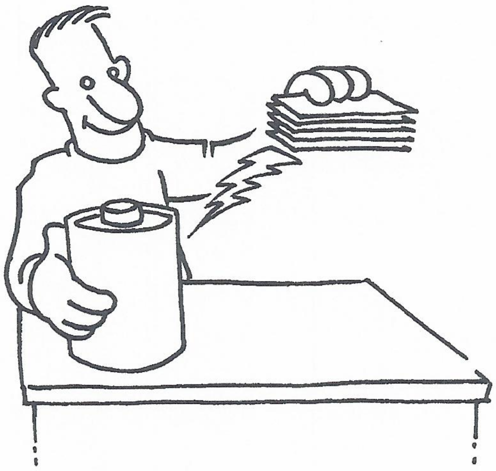

Decreasing Plate Separation Strengthens the Electric Field

Figure 1 shows a single positive charge and a single negative charge. These charges are far apart, and there is a very weak electric field between them. Now let's move the charges closer together. As they move toward each other, the electric field becomes stronger. Remember that opposite electric charges attract. When the charges are closer together there is a stronger attraction force between them.

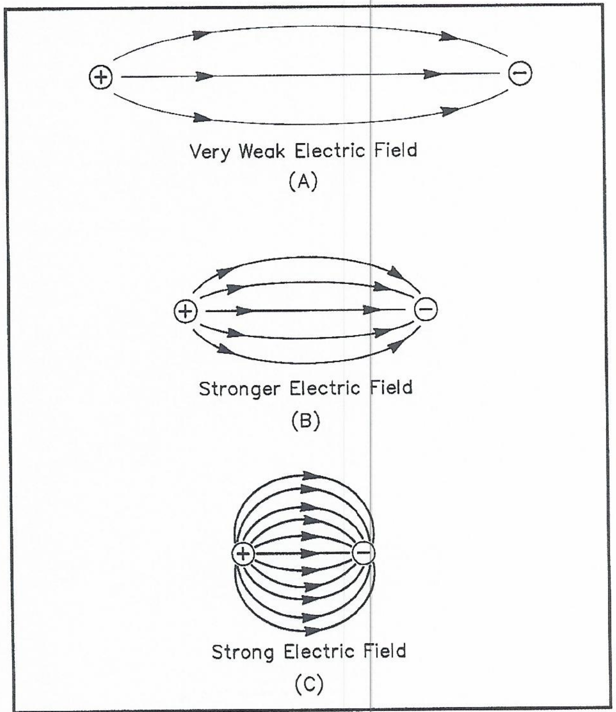

Figure 1—A positive and negative electric charge gradually move closer together. In Part A, they are far apart and exert a weak force of attraction on each other. There is a weak electric field between them. We moved the charges closer together in Part B. Now the attraction force is stronger, and the electric field between them is stronger. At C, the charges are close together. Now there is a strong attraction force between them. There is also a strong electric field.

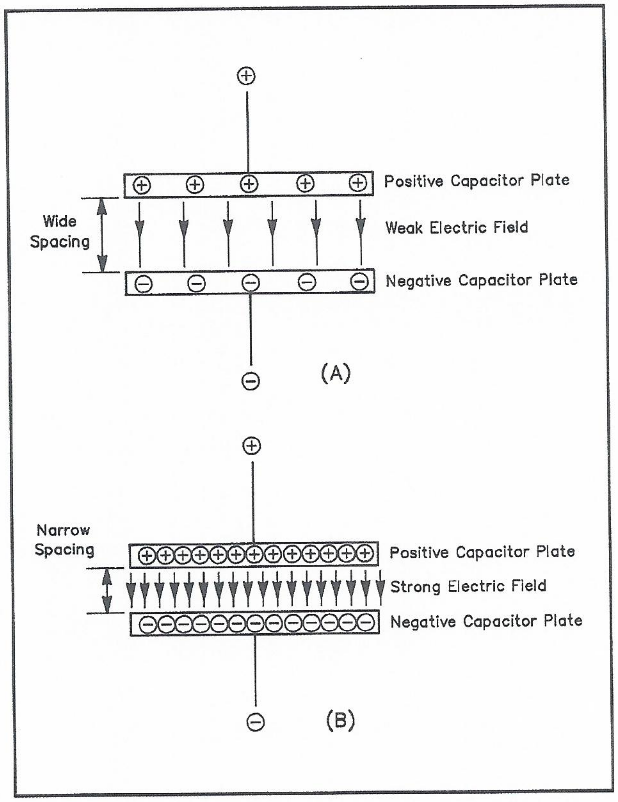

Figure 2—The plates of capacitor A have a wide spacing. We charged this capacitor by connecting it to a battery, so there is some positive and negative charge on the plates. The plate spacing is wide, so the electric field between the plates is weak. At B, we move the capacitor plates closer together. The plates have the same dimensions. We connected the new capacitor to the same battery we used to charge the first capacitor. This time there are more electrons on the negative capacitor plate. The positive charge is also larger. We increased the electric-field strength by moving the plates closer together.

The capacitor plates in Figure 2A are far apart. The extra electrons on the negative plate exert a weak force to repel electrons from the positive plate. (The negative side also exerts a weak force to attract more positive charge onto the positive capacitor plate.)

Now let's move the capacitor plates closer together. Figure 2B shows a much stronger electric field between the plates. There are more electrons on the negative plate. There is more positive charge on the positive capacitor plate.

The plates are the same size for both capacitors. We connected the same voltage source to the capacitors in each case as well. The only variable for the two capacitors in Figure 2 is the plate spacing.

How close can we safely move our capacitor's plates? Remember that the insulation between the plates keeps the electrons from jumping across to the positive plate. Air is a good insulator, as long as the voltage doesn't become too large. Lightning is an example of an electric spark jumping through air, however. Even at low voltages, the electrons will jump across the gap when the plates move too close.

There is a trade-off between the safe operating voltage and increased capacitance achieved by moving the plates closer together. This is why most capacitors use insulators other than air. Many materials can withstand higher voltages than air. A thin layer of mica or ceramic material is a good capacitor insulator.

Figure 3 shows the construction of a mica compression variable capacitor. Several sets of plates have a thin mica wafer separating them. A screw passes through a hole in the center of the assembly and threads into the ceramic capacitor base. As you turn the screw into the base, it compresses the capacitor layers. This brings the plates closer together. As you learned earlier, the plates hold more charge when they are closer together. This produces a stronger electric field.

Other capacitors use a construction method similar to the one you used to make your experimental capacitor in the last section. Solid insulating materials allow the plates to be close together, increasing the amount of charge the capacitor can hold. Rolling the assembly into a cylinder reduces package size.

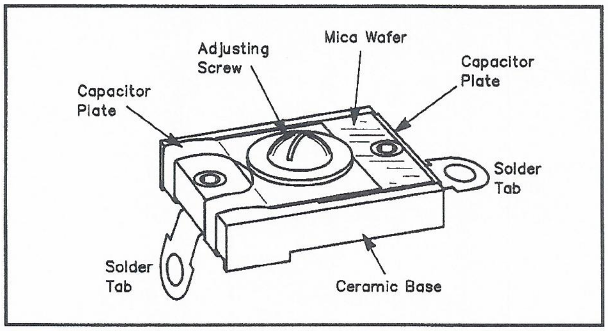

Figure 3—A mica compression capacitor uses thin mica wafers between the capacitor plates. A screw passes through the plates and mica, threading into the ceramic base. As you turn the screw into the case it presses the capacitor plates closer together. This increases the capacitance, producing a stronger electric field between the plates.

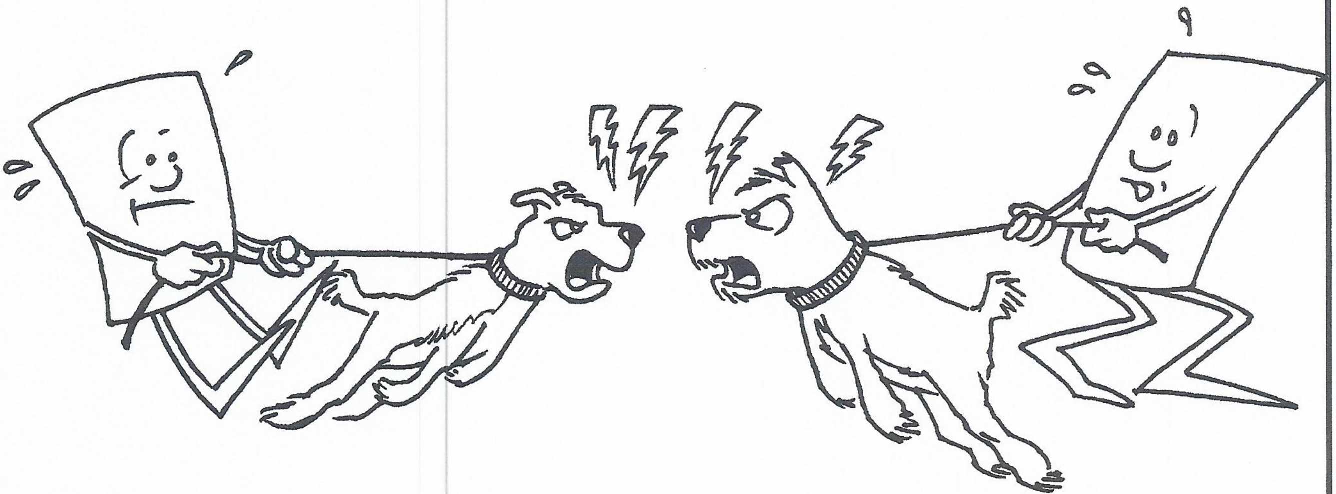

Dielectric Constants and the Electric Field

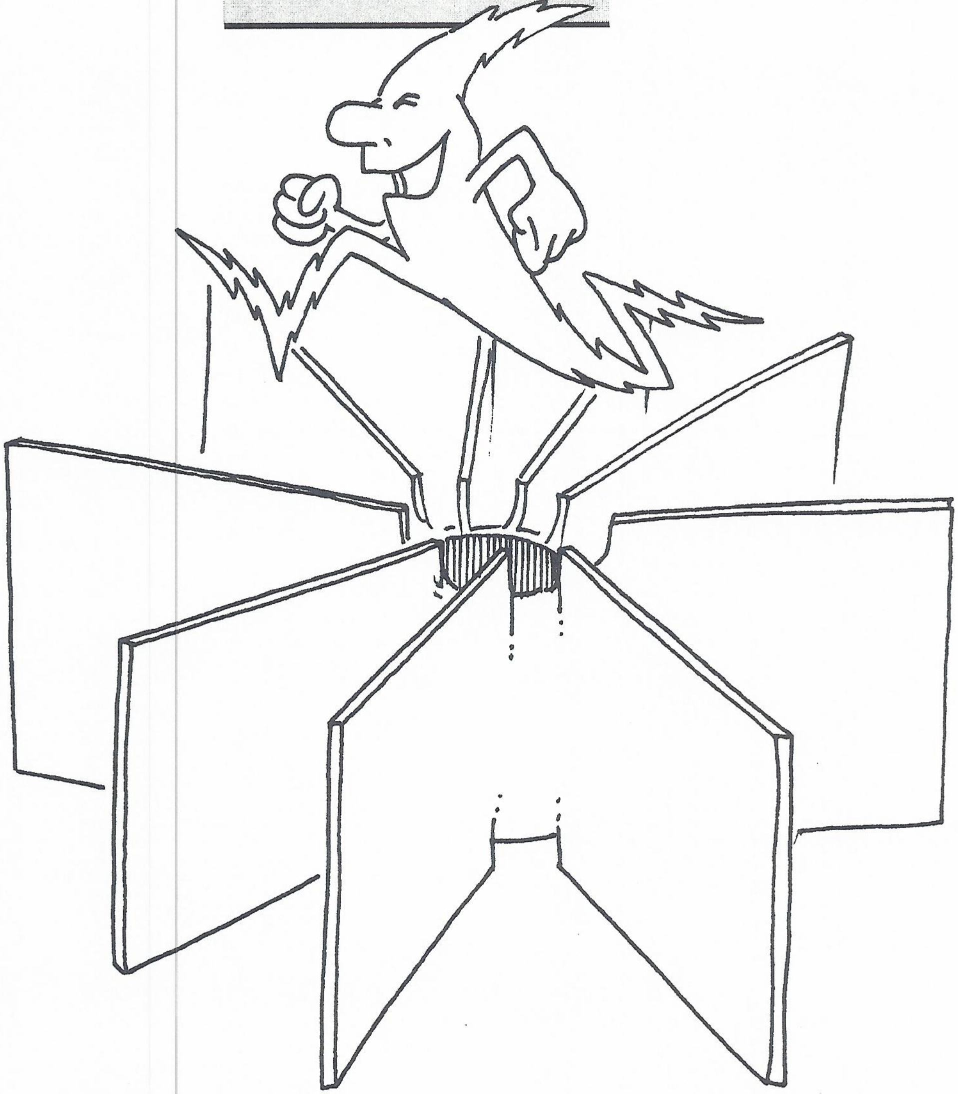

A capacitor does not conduct direct-current electricity. The insulation between the capacitor plates blocks the flow of electrons. You learned earlier there is a short current pulse when you first connect the capacitor to a voltage source. The capacitor quickly charges to the supply voltage, and then the current stops.

We call the insulation used in a capacitor a *dielectric* because the capacitor does not conduct *direct electric* current. An *air dielectric capacitor* uses air to insulate the capacitor plates. Some common capacitor dielectrics are mica, polystyrene plastic, paper, ceramic and aluminum oxide.

Breakdown voltage is an important dielectric rating. You usually will see breakdown voltage expressed as a number of volts per mil of dielectric thickness. A *mil* is a thousandth of an inch (0.001 inch).

Air has a breakdown voltage of 21 volts per mil. Suppose you plan to use the capacitor in a circuit that has a 20-volt supply. That means you will need at least 0.001-inch spacing between the capacitor plates. (You probably will want more spacing to allow a safety factor.) What if you want to use the capacitor in a circuit that has 200 volts? You'll need a spacing of 10 mils, or 0.01 inch.

Most capacitor-dielectric materials have higher breakdown-voltage ratings than air. Mica, for example, has a breakdown-voltage rating of 3800 to 5600 volts per mil. Obviously, a 1-mil thickness of mica is sufficient for most applications.

You should always check the voltage rating of a capacitor before you install it in a circuit. Normally, low-voltage capacitors are physically smaller than higher-voltage units with the same capacitance rating. If a capacitor cannot withstand the voltage applied to it, a spark probably will jump through the insulation. This will destroy the capacitor, and may damage other circuit components as well.

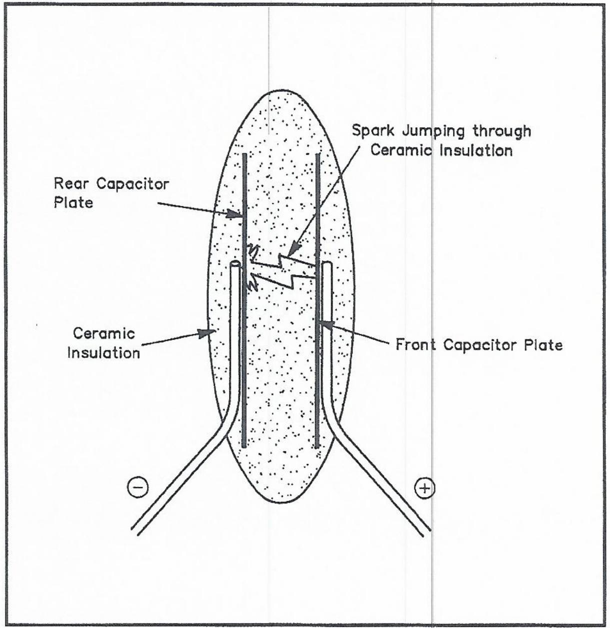

Figure 1—When the voltage is large enough, a spark will jump through any insulating material. A thicker insulator requires a higher voltage to make the spark jump.

Another important dielectric rating is the *dielectric constant.* This is a measure of how much energy you can store in the insulation between the capacitor plates. Another way to say this is that the dielectric constant indicates the electric-field strength.

Usually when you see a dielectric constant listed, it will be the *relative dielectric constant.* This means it is given in comparison to air. Engineers give air a relative dielectric constant of 1.0.

Porcelain is one type of ceramic used in capacitors. The relative dielectric constant for porcelain is between 5.1 and 5.9. What does this mean? Suppose you make a ceramic capacitor and an air-dielectric capacitor. Both have the same plate size and spacing. The porcelain-dielectric capacitor will have a capacitance that is 5.1 to 5.9 times greater than the air-dielectric one.

Table 1
Dielectric Constants and Breakdown Voltages

Material	*Relative Dielectric Constant**	*Breakdown Voltage***
Air	1.0	21
Bakelite	4.4-5.4	240
Bakelite, mica filled	4.7	325-375
Formica	4.6-4.9	450
Glass, window	7.6-8	200-250
Glass, Pyrex	4.8	335
Mica, ruby	5.4	3800-5600
Mycalex	7.4	250
Paper, Royalgrey	3.0	200
Polyethylene	2.3	1200
Polystyrene	2.6	500-700
Porcelain	5.1-5.9	40-100
Quartz, fused	3.8	1000
Teflon	2.1	1000-2000

*At 1 megahertz
**In volts per mil (0.001 inch)

Table 1 lists some common dielectric materials. The Table gives relative dielectric constants and breakdown-voltage ratings for these materials. The breakdown voltages are in volts per mil of thickness.

These relative dielectric constants are measured at 1 megahertz. In general, dielectric constants decrease as you increase the operating frequency. The change is normally small, however.

Factors that Determine Capacitance

In this chapter you have been studying capacitors. When you connect a capacitor to a voltage source, an electric charge builds up on the capacitor plates. Extra electrons build up on one plate, giving it a negative charge. The other plate loses electrons, so it takes a positive charge. These opposite charges, separated by an insulating material, produce an electric field. Capacitors store electrical energy in the form of an electric field.

In this chapter's previous sections we discussed several ways to increase the amount of charge a capacitor holds. In this section we will summarize those factors. First, however, let's discuss the units we use to measure this stored charge. *Capacitance* is the measure of a capacitor's ability to store electric charge.

The basic unit of capacitance is the *farad*. Scientists named the farad for Michael Faraday. Faraday was a British scientist during the early 1800s. Faraday had an interest in static electric fields, such as the field in a charged capacitor. We use a capital letter F to abbreviate farad.

The farad is too large a unit for practical capacitor measurements. A capacitor with a 1-farad capacitance would be physically very large. Microfarads (10^{-6}), abbreviated µF, and picofarads (10^{-12}), abbreviated pF, are more practical measurement units. You also may see capacitance values given in nanofarads (10^{-9}), abbreviated nF. You should recognize these metric prefixes.

Three main factors determine capacitance. The first of these is the plate surface area. Capacitance varies directly with plate surface area. You can double the capacitance value by doubling the capacitor's plate surface area. Figure 1 shows a capacitor with a small surface area and another one with a large surface area.

Remember you can increase the plate surface area by adding more capacitor plates. Figure 2 shows alternate plates connecting to opposite capacitor terminals. Many capacitors use this multiple-plate construction technique.

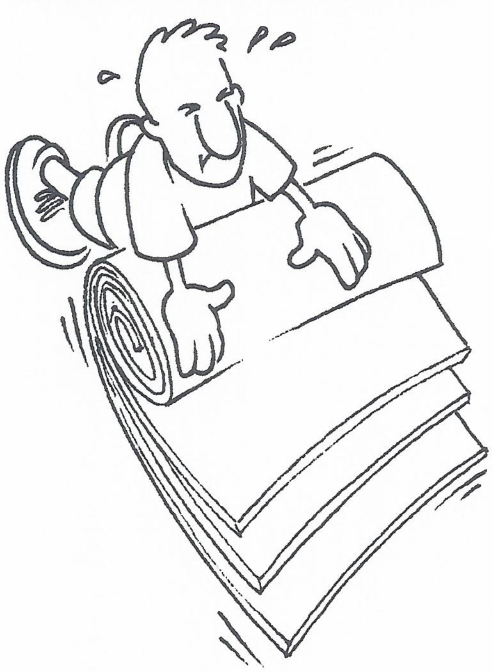

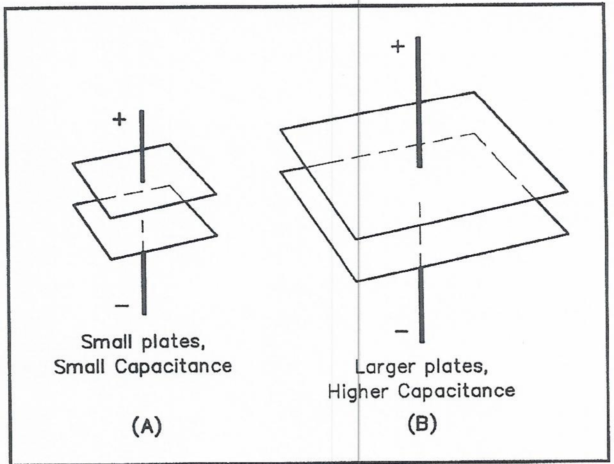

Figure 1—Capacitance varies directly with plate surface area. If all other factors are the same, a capacitor with more plate surface area will have a larger capacitance.

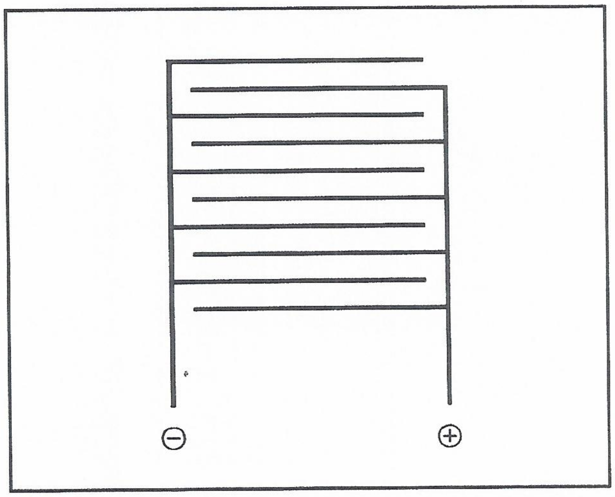

Figure 2—You can connect several sets of plates to produce a capacitor with more surface area.

Larger plates produce physically larger capacitors. Stacking many smaller plates also increases a capacitor's size. Manufacturers roll the stack of plates and insulating material into a cylinder for some capacitor types.

The second important factor affecting capacitance rating is the distance between the plates. Capacitance varies inversely with the distance between plate surfaces. The capacitance increases when the plates are closer together. Figure 3 shows capacitors with the same plate surface area, but with different plate spacing.

The third important factor determining capacitance is the dielectric constant of the insulating material. An insulating material with a higher dielectric constant produces a higher capacitance rating. (This assumes the same plate surface area and spacings.)

Figure 4 shows two capacitors. Both have the same plate surface area and spacing. Air is the dielectric in the first capacitor and mica is the dielectric in the second one. Mica's dielectric constant is 5.4 times greater than air's dielectric constant. The mica capacitor will have 5.4 times more capacitance than the air-dielectric capacitor. In addition, the mica capacitor can withstand much higher voltages.

To summarize, there are three ways to increase capacitance. You can increase the plate surface area, either by increasing the size of one pair of plates or by increasing the number of plates. You can reduce the spacing between the capacitor plates, by using a thinner layer of insulating material. You can use a better insulator between the capacitor plates.

Three main factors that determine capacitance:

- plate surface area
- distance between plates
- dielectric constant of the insulating material

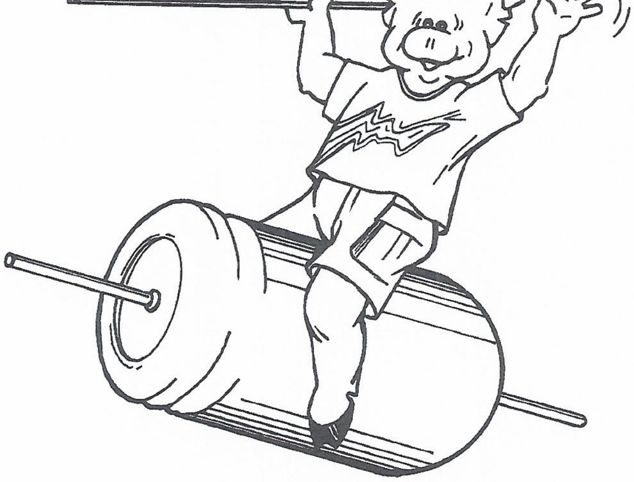

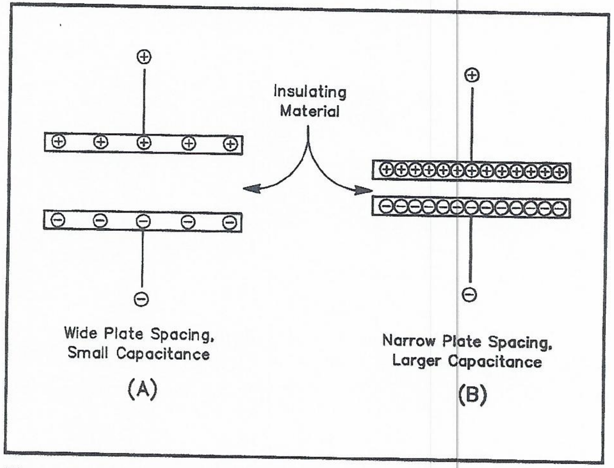

Wide Plate Spacing, Small Capacitance

(A)

Narrow Plate Spacing, Larger Capacitance

(B)

Figure 3—Capacitance varies inversely with the distance between the plate surfaces. If all other factors are the same, a capacitor with plates closer together will have a larger capacitance.

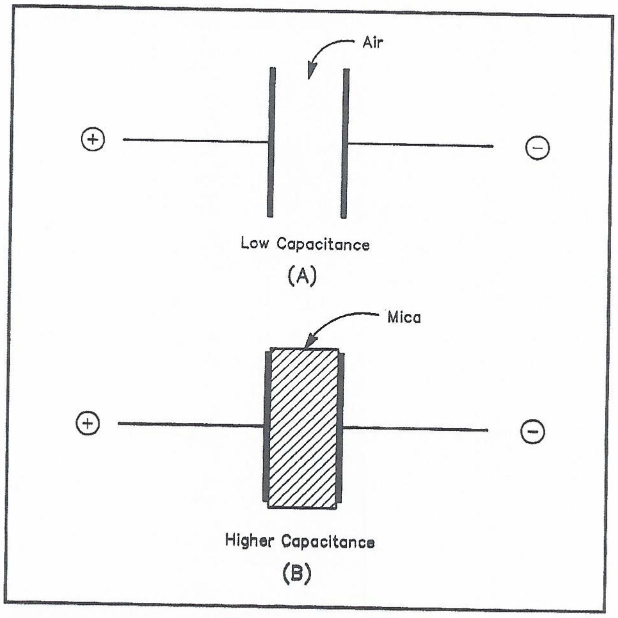

Low Capacitance

(A)

Higher Capacitance

(B)

Figure 4—Capacitance depends on the dielectric constant of the insulating material.

Practical Capacitors

You can buy capacitors made with a variety of dielectrics. Each dielectric lends itself to certain construction techniques. There are many trade-offs with regard to cost, breakdown-voltage rating and size. Some dielectric materials are less effective at higher operating frequencies, so you want to avoid those for radio-frequency circuits. Operating-temperature changes have a significant effect on the capacitance value of some capacitor types.

Selecting the proper capacitor for a specific job isn't difficult. You do have to understand the effects of some trade-offs, however. For example, an inexpensive ceramic capacitor may do fine as an audio-bypass capacitor. You would not use a normal ceramic capacitor in a radio-frequency oscillator circuit.

This section describes the common capacitor construction methods and dielectric materials. The information serves as an introduction. It will help you understand why a 10 microfarad paper capacitor may not be a good substitute for a 10 microfarad tantalum capacitor.

You may see the breakdown-voltage rating given as working-volts dc (WVDC). This is the highest direct voltage you can safely connect to the capacitor. Select a capacitor with a breakdown voltage at least two times larger than the highest voltage you expect it to endure. This provides a safety margin.

Mica capacitors consist of metal-foil strips separated by thin mica layers. Figure 1 shows this construction. Alternate plates connect to each electrode. A plastic or ceramic coating seals the capacitor.

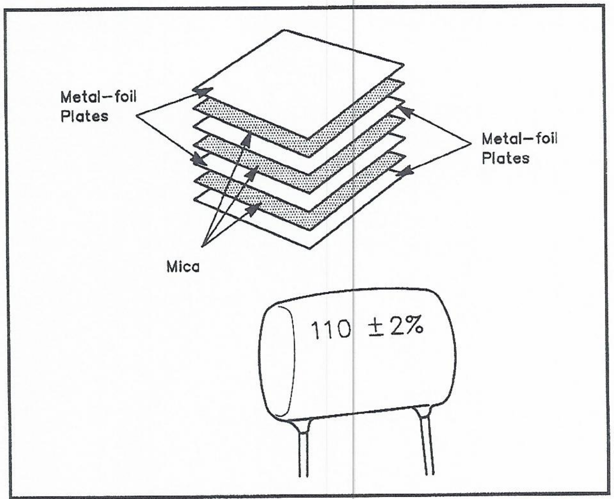

Figure 1—Mica capacitors have thin sheets of mica separating metal-foil capacitor plates. Alternate foil layers connect to the capacitor leads. A ceramic coating protects the assembly from dirt and moisture.

Mica has a breakdown-voltage rating between 3800 and 5600 volts per mil. This is why we use mica capacitors in transmitters and high-power amplifiers. Their ability to withstand high voltages is important.

Mica capacitors have good temperature stability. Their capacitance does not change much as the temperature changes.

Typical capacitance values for mica capacitors range from 1 picofarad to 0.1 microfarad. Breakdown-voltage ratings as high as 35,000 are possible.

Ceramic capacitors have a metal film on both sides of a thin ceramic disc. Wire leads attach to the metal film. Figure 2 shows this construction. The capacitor has a protective plastic or ceramic covering.

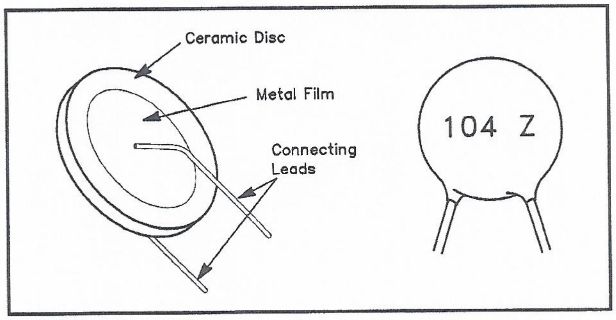

Figure 2—This drawing shows the construction of a disc ceramic capacitor. A metal film deposited on both sides of a small ceramic disc forms the electrodes. Wires attach to the metal, and the assembly gets a protective plastic or ceramic coating.

Ceramic capacitors are inexpensive and easy to make. Many electronics circuits use ceramic capacitors. You can't use them in every application, however.

The capacitance of ordinary ceramic capacitors changes when the temperature changes. You can't use them in a circuit requiring a capacitance that doesn't change with temperature.

Some capacitors have a *negative temperature coefficient*. This means their value decreases when the temperature goes up. Others have a *positive temperature coefficient*. Their capacitance increases when the temperature goes up.

There are special ceramic capacitors that don't change value with temperature changes. These *NP0 capacitors* have a zero temperature coefficient. The NP0 stands for "negative-positive zero." An NP0 capacitor has neither a negative temperature coefficient nor a positive one. The capacitance of an NP0 capacitor remains nearly unchanged over a wide temperature range.

You can buy ceramic capacitors with values from 1 picofarad (1 pF) to 0.1 microfarad (0.1 μF). Ceramic

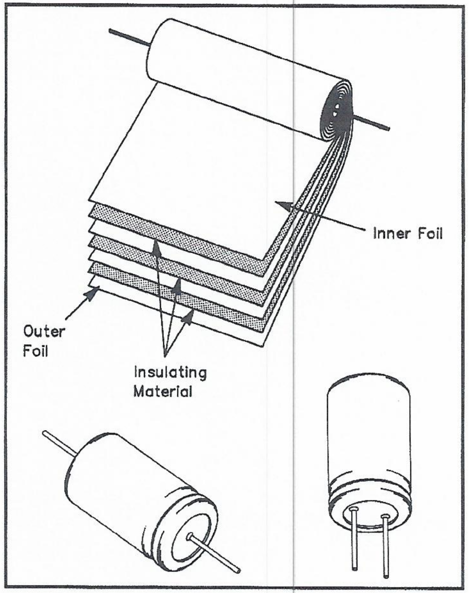

Figure 3—Several capacitor types use the same construction method as the paper capacitor. An insulating material between metal-foil plates forms the capacitor. Roll the assembly into a cylinder and finish it with a protective coating. Paper capacitors use an insulating paper as the dielectric. Plastic-film capacitors use mylar or polystyrene. Chemical-soaked paper goes between the aluminum-foil layers of an aluminum electrolytic capacitor.

capacitors with breakdown-voltage ratings up to 1000 volts are common.

Paper capacitors consist of alternate layers of metal foil and insulating paper. Wire leads attach to the two sets of metal-foil plates. Then the manufacturer rolls the layers into a cylinder, as Figure 3 shows.

The capacitor may have a plastic covering, or it may have a wax coating. This outer layer protects the capacitor from dirt and moisture.

The capacitor may have a stripe around one end. This shows the lead that attaches to the outer metal-foil plate. You can connect this end to the circuit ground, so the outer foil shields the capacitor from radio-frequency energy.

Capacitance values of paper capacitors range from about 500 pF to about 50 μF. They come with voltage ratings up to about 600 WVDC.

Paper capacitors are generally inexpensive. They have a larger size for a given value than other capacitor types, and this makes them impractical for some uses.

Plastic-film capacitors are similar in construction to paper capacitors. Thin sheets of mylar or polystyrene serve as the insulating layers. The plastic material gives the capacitors a high voltage rating in a physically small package. Mylar and polystyrene capacitors have good temperature stability. Typical values range from 5 pF to 0.47 μF.

Aluminum electrolytic capacitors also use a similar construction technique. Sheets of aluminum foil have a layer of paper soaked in a chemical solution between them. The rolled assembly goes into a protective casing, usually a metal can.

The chemical causes a reaction when you apply electricity, so we call the chemical an *electrolyte.* This is where we get the name *electrolytic.*

When you apply a voltage to the capacitor it causes a chemical reaction on the positive plate surface. This produces a thin aluminum-oxide layer, which forms the capacitor dielectric. Electrolytic capacitors have a high capacitance value in a small package because of this thin dielectric layer.

One lead of an electrolytic capacitor always has a + or a – sign clearly marked. You must observe this polarity when you connect the capacitor into a circuit. If you connect an aluminum electrolytic capacitor with the wrong polarity, a gas will form inside the capacitor. This may cause the capacitor to explode. At the very least, you will destroy an electrolytic capacitor by connecting it with reverse polarity.

Electrolytic capacitors are available in capacitance values from 1 μF to 100,000 μF (0.1 farad). Some of them have voltage ratings of 400 V or more. Electrolytic capacitors with high capacitance values and/or high voltage ratings are physically large.

Tantalum capacitors are another form of electrolytic capacitor. These are much smaller than aluminum electrolytic capacitors for a given value. They usually have the shape of a water drop.

The *anode*, or positive capacitor plate, is a small tantalum pellet. A layer of manganese dioxide forms the solid electrolyte, or chemical, which produces an oxide layer on the outside of the tantalum pellet. This oxide layer serves as the dielectric. Layers of carbon and silver form the *cathode* or negative capacitor plate.

An epoxy coating gives the capacitor its characteristic shape. This is why we often call them "tear-drop capacitors." Figure 4 shows the construction of a tantalum electrolytic capacitor.

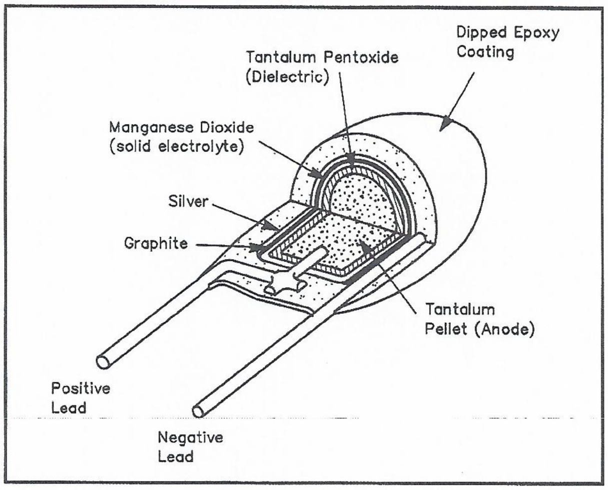

Figure 4—Tantalum capacitors, sometimes called "tear-drop capacitors" use a small tantalum pellet as the positive plate. This drawing shows the construction of these capacitors.

CHAPTER 18
Capacitive Reactance

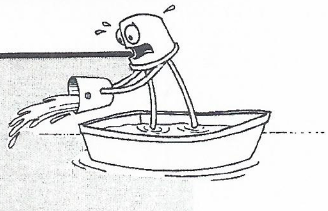

Capacitors Oppose a Change in Applied Voltage

A constant direct voltage applied to a capacitor puts an electric charge on the capacitor. As the charge increases, there is less current into the capacitor. When the voltage across the capacitor plates equals the supply voltage, the current stops. Figure 1A shows a simple circuit to charge a capacitor. With the switch in position 1, there is current through R1 to charge the capacitor. Figure 1B is a graph of the circuit current and the capacitor voltage.

Now let's move the switch to position 2, as Figure 2A shows. This disconnects the voltage supply and puts R2 across the capacitor terminals. The capacitor returns the energy stored in it by forcing current through R2. As the capacitor returns its stored energy to the circuit it loses charge. The voltage across the capacitor decreases. Ohm's Law tells us the current through R2 decreases as the voltage decreases. Figure 2B is a graph of the current through R2 and the capacitor voltage after we change the switch position.

Can you guess what happens if we connect an alternating voltage to our capacitor? Figure 3 shows a simple circuit with a sine-wave voltage supply. We'll make the voltage applied to the top capacitor plate positive for the first sine-wave half cycle. As the sine-wave voltage increases from zero there is a sudden rush of current as the capacitor begins to charge. That current tapers off as the charge increases.

The sine-wave voltage reaches a maximum, and begins to decrease to zero again. When the voltage begins to decrease, the capacitor begins to return its stored energy to the circuit. It is interesting to realize that the current direction changes when the voltage begins to

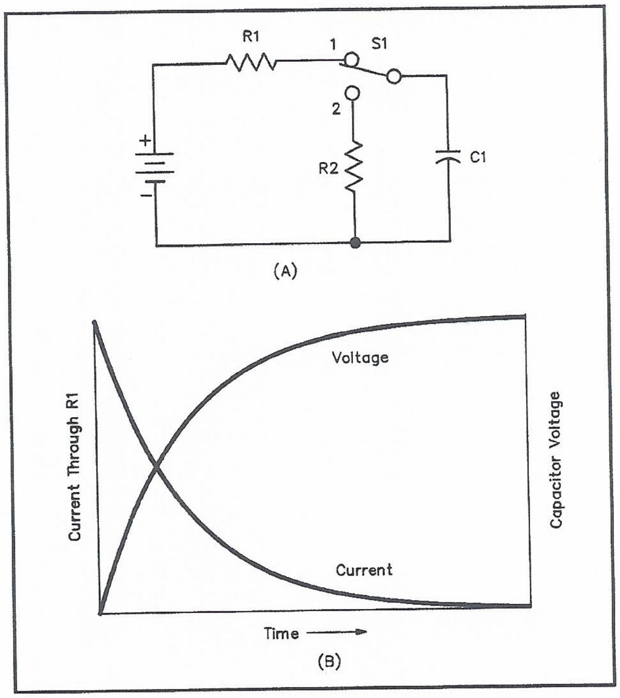

Figure 1—We can charge a capacitor using the circuit shown at Part A, when the switch is in position 1. Part B is a graph of the circuit current and voltage across the capacitor plates as it charges. Notice there is no voltage on the capacitor to begin, and the current is large. As charge builds up on the capacitor plates, however, the voltage increases and the current decreases. When the voltage across the capacitor plates equals the battery voltage the current stops.

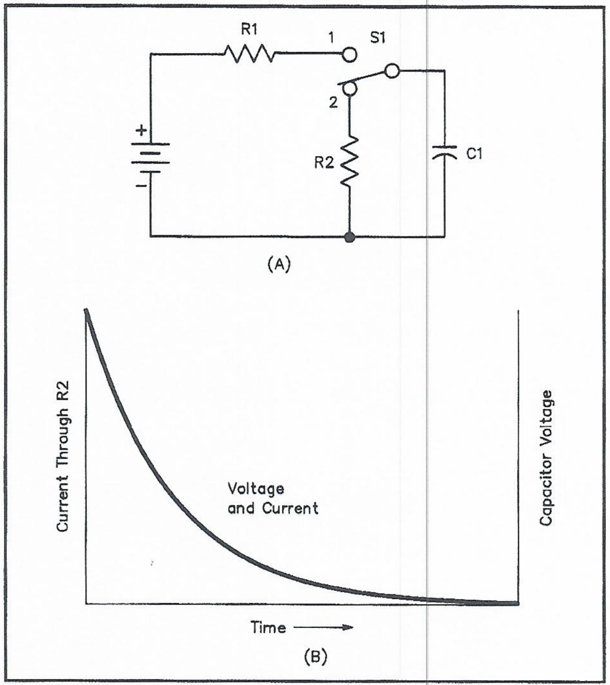

Figure 2—Part A shows the circuit of Figure 1A with the switch moved to position 2. This removes the battery from the circuit and connects R2 across the capacitor terminals. The Part B graph shows the current through R2 and the voltage across the capacitor terminals. The capacitor releases its stored energy.

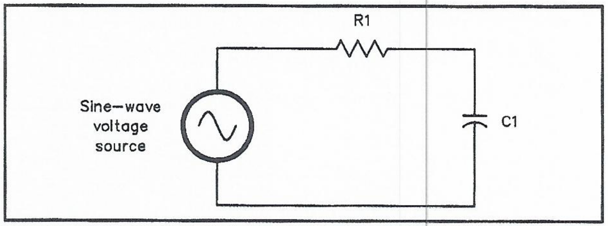

Figure 3—We can apply an alternating voltage to a capacitor and observe the circuit current and capacitor voltage with this circuit. The text describes the results as the applied voltage goes through one sine-wave cycle.

decrease. Electrons were moving *onto* the bottom capacitor plate of Figure 3 as the capacitor was charging. Now electrons move *off* the bottom plate, because the capacitor is returning energy to the circuit.

What happens during the next sine-wave half cycle? The voltage polarity reverses, so the voltage applied to the top capacitor plate is negative. Electrons continue to move *off* the bottom plate, and *onto* the top plate. Soon the capacitor returns all the original charge to the circuit, and it begins to charge in the opposite direction. As the capacitor charge increases the current decreases.

After the sine-wave voltage reaches its maximum negative value, the voltage begins to decrease to zero again. Now the capacitor returns its stored energy to the circuit again. Electrons flow *off* the top plate. The current changes direction again.

Figure 4 graphs the sine-wave voltage source and capacitor current. We used a solid line to represent the voltage and a dashed line to represent the current. There are no numbers on the vertical or horizontal scales because we are not trying to show specific values. The actual voltage, current and time values depend on the resistor and capacitor values, the applied voltage and the sine-wave frequency.

As you study Figure 4, notice that capacitor current is a maximum at 0°. The applied voltage doesn't reach a maximum until 90° on the graph. This describes the *phase* relationship between the alternating current *through* a capacitor and the voltage *across* it. The alternating voltage reaches every point on its waveform 90° after the current. Sometimes we say the voltage across a capacitor *lags* the current through it. Another way of saying this is the current through a capacitor *leads* the voltage across it. In either case the *phase angle* between the voltage and current is 90°.

It appears that capacitors don't like the applied voltage to change. They react to a voltage change as to oppose that change. When the voltage is increasing, they take energy from the voltage supply. You could view this as an attempt to prevent the voltage from increasing. When the voltage is decreasing, the capacitor returns stored energy to the circuit. Think of this action as working to prevent the voltage from decreasing.

Capacitors *react* to voltage changes, trying to prevent the change. We call this opposition to voltage change *reactance*. This opposition to voltage (and current) change in a capacitor is similar to the opposition to current of a resistor. In fact, we measure this opposition in *ohms*.

In the next section you will learn how to calculate *capacitive reactance*. You also will learn how the applied-signal *frequency* affects this opposition to voltage and current changes.

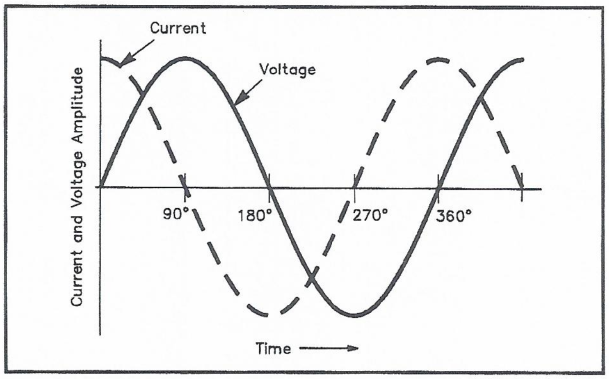

Figure 4—The solid line shows the voltage applied to the capacitor plates of Figure 3. This is a sine-wave voltage that starts at zero. It applies a positive voltage to the top capacitor plate during the first half cycle. During the second half cycle the positive voltage goes to the bottom capacitor plate.

There is More Opposition at Lower Frequencies

A discharged, or "empty," capacitor acts like a short circuit when you first connect voltage to it. There is a large current as the capacitor begins to charge. As the voltage builds up, the current through the capacitor will drop toward zero. Capacitors block direct current.

Capacitive reactance is the opposition capacitors have to current through them. Since capacitors won't pass a steady direct current, you could say they have a large reactance to dc.

Look at Figure 1. We applied a 10-hertz alternating voltage to a 1-microfarad capacitor. The voltage source applies 100-volts RMS to the circuit. The ac ammeter shows a 6.28-milliamp current through the circuit. How much reactance does the capacitor have?

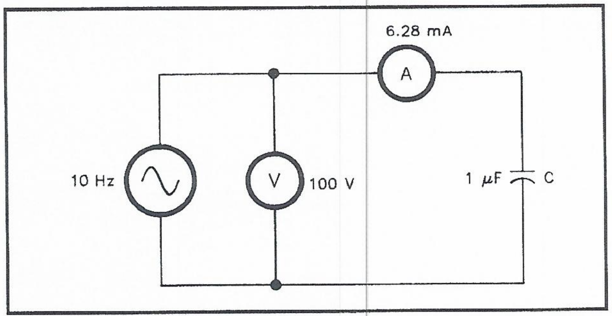

Figure 1—We'll use this circuit for a thought experiment about capacitive reactance.

Does this sound a bit like an Ohm's Law problem? It should. You know a circuit voltage and current, and want to know the opposition to that current. Use Ohm's Law to calculate the reactance in this problem instead of resistance.

Since this is a "thought experiment," we assume the components are *ideal*. That means there is no resistance in the capacitor. The wires don't have any resistance either. *Real* components always have some resistance. The math is more difficult if a circuit has both resistance and reactance. We won't try any problems like that here. You can learn how to handle the more difficult math after you learn the basic principles.

We use X to represent reactance. A subscript C reminds us we are working with a capacitor in this problem. Capacitive reactance is X_c

$$E = I X_c \qquad \text{(Equation 1)}$$

Solve this equation for X_c, or use the equation circuit given in Figure 2.

$X_c = E / I$
$X_c = 100 \text{ volts} / 6.28 \text{ mA}$
$X_c = 15{,}924 \text{ ohms}$

(Don't forget that 6.28 mA is 6.28×10^{-3} amperes.)

Let's change our circuit for the next part of our experiment. Replace the 1-µF capacitor with a 2-µF unit. This time the ammeter reads 12.56 mA. What is the new capacitor's reactance? Solve Equation 1 for X_c again.

$X_c = E / I$
$X_c = 100 \text{ volts} / 12.56 \text{ mA} = 7962 \text{ ohms}$

What did you learn from this experiment? When we double the capacitance value, the reactance becomes 1/2 the original value. What do you expect the reactance to be if we used a 3-µF capacitor? If you said 5308 ohms, you are correct. Capacitive reactance is inversely related to capacitance. Larger capacitance values produce smaller reactances.

Now let's make another change to our circuit. This time we will connect a 100-Hz voltage source. Change back to the original 1-µF capacitor. The voltage supply still produces 100 volts. This time the ammeter reads 62.8 mA. Calculate the reactance of the 1-µF capacitor with the new voltage source.

$X_c = 100 \text{ volts} / 62.8 \text{ mA} = 1592.4 \text{ ohms}$

The new signal frequency is ten times the original frequency. Did you notice the current is ten times larger than the first example? Were you surprised to find the reactance is ten times smaller? This part of the experiment taught you that reactance is inversely related to frequency. Higher-frequency signals produce smaller reactances, for a given capacitor.

Do you think this is a reasonable conclusion? Let's think about what happens when we apply higher-frequency signals to a capacitor.

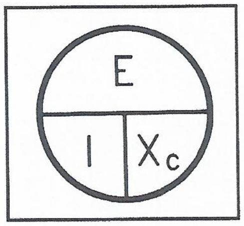

Figure 2—Use this equation circle to solve Equation 1 for capacitive reactance, X_c.

You know that capacitors have a high reactance to dc signals. When you connect a low-frequency ac signal, the capacitor charges to the full signal voltage. The capacitor takes as much charge as it can hold, for that voltage.

Now begin to increase the signal frequency. What if the signal voltage reaches its peak, and begins to decrease before the

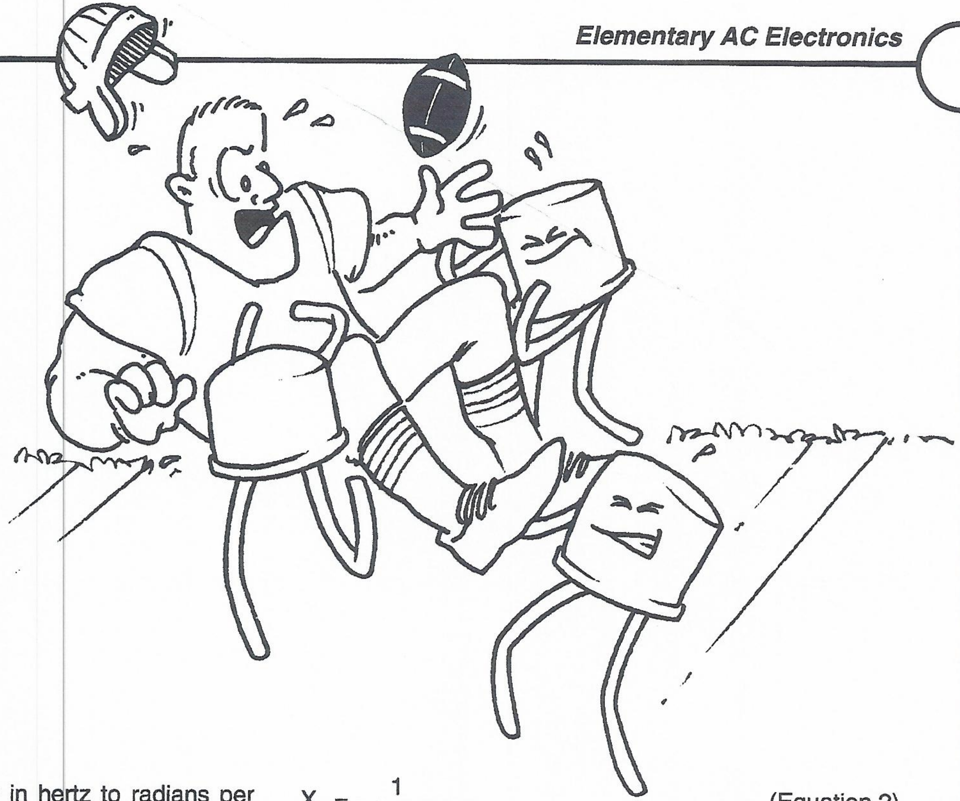

capacitor takes a full charge? If the capacitor doesn't "fill up" with charge, it won't have as much opposition. As the frequency increases even more, the capacitor has less opposition. Figure 3 is a graph of reactance and frequency. Reactance is highest at dc, and decreases quickly.

We found two factors that affect reactance in this section. When either capacitance or signal frequency increases, the reactance decreases. We can write an equation to calculate capacitive reactance, based on these two factors.

We normally express frequency as a number of waveform cycles per second, measured in hertz. We also can relate each cycle to the rotation of a wheel. Then we express frequency in radians per second. You can convert any frequency in hertz to radians per second. Just multiply frequency in hertz by 2π. This is the number of radians in one cycle. Equation 2 shows how to calculate capacitive reactance.

$$X_C = \frac{1}{2\pi f C} \qquad \text{(Equation 2)}$$

where:
  f is the frequency in hertz
  C is the capacitance in farads

If you know a frequency in kilohertz or megahertz, you must write it in hertz for this equation. If you know the capacitance in microfarads or picofarads, you must convert those values to farads.

Calculate the reactance of a 1-µF capacitor with a 10-Hz signal applied. This is the example from Figure 1.

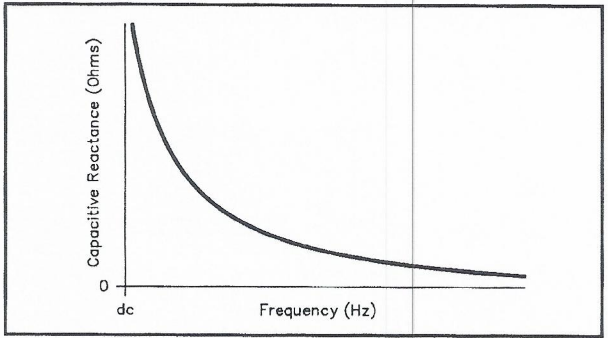

Figure 3—This graph shows how capacitive reactance varies with signal frequency. At dc, the reactance is very large. At high frequencies the reactance is very small.

$$X_C = \frac{1}{2\pi f C} \qquad \text{(Equation 2)}$$

$$X_C = \frac{1}{2 \times 3.14 \times 10\ \text{Hz} \times 1 \times 10^{-6}\ \text{F}}$$

$$X_C = \frac{1}{6.28 \times 10 \times 10^{-6}} = \frac{1}{6.28 \times 10^{-5}}$$

X_C = 15,924 ohms

You shouldn't be surprised to discover this is the same answer we found using the voltage and current in Ohm's Law earlier. Let's try another problem. Find the reactance of a 2-µF capacitor with a 100-Hz supply. (This is not the same as the problem earlier in this section.)

$$X_C = \frac{1}{2\pi f C} \qquad \text{(Equation 2)}$$

$$X_C = \frac{1}{2 \times 3.14 \times 100\ \text{Hz} \times 2 \times 10^{-6}\ \text{F}}$$

$$X_C = \frac{1}{6.28 \times 200 \times 10^{-6}} = \frac{1}{1.256 \times 10^{-3}}$$

X_C = 796.2 ohms

You can practice a few more capacitive reactance problems. Try calculating the reactance for the other circuits we studied at the beginning of this section. Your answers should agree with the ones we found there. You might even want to calculate the reactance of a few capacitance values for frequencies of 1 kilohertz and 1 megahertz. With practice (and your trusty scientific calculator) you'll soon be calculating capacitive reactance values with ease.